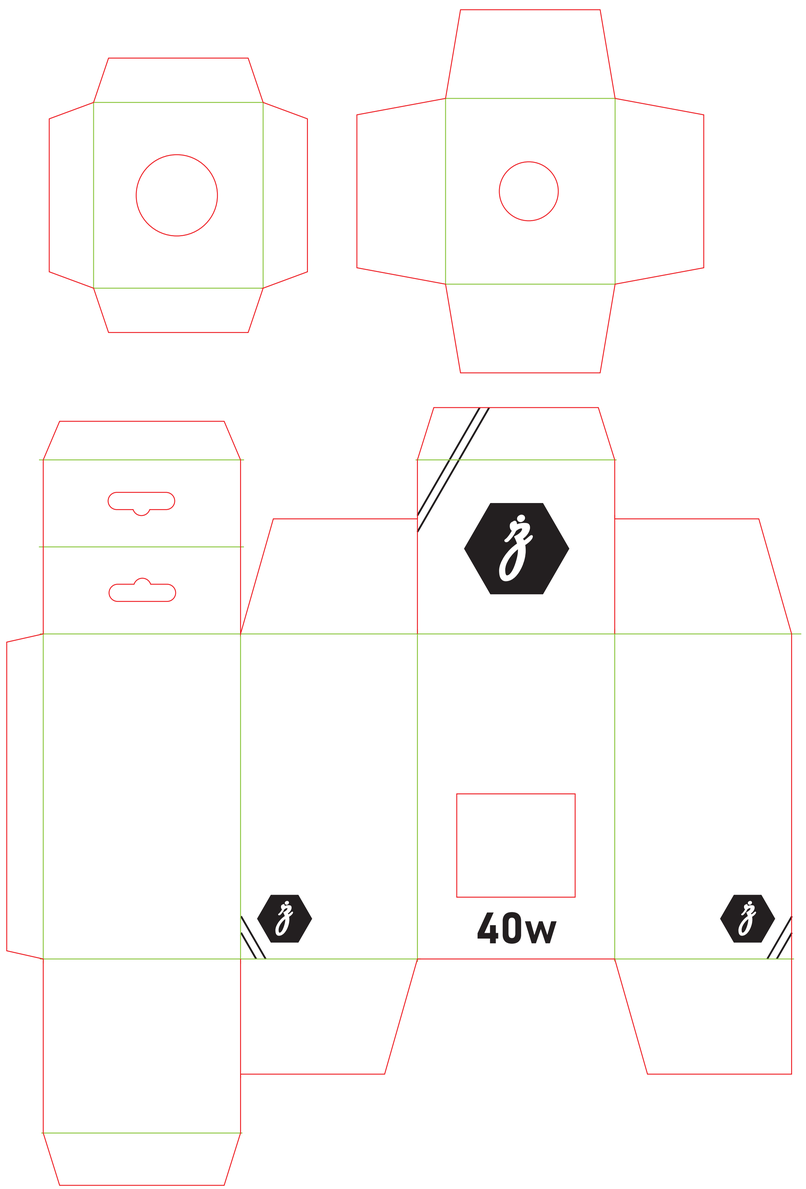
40w

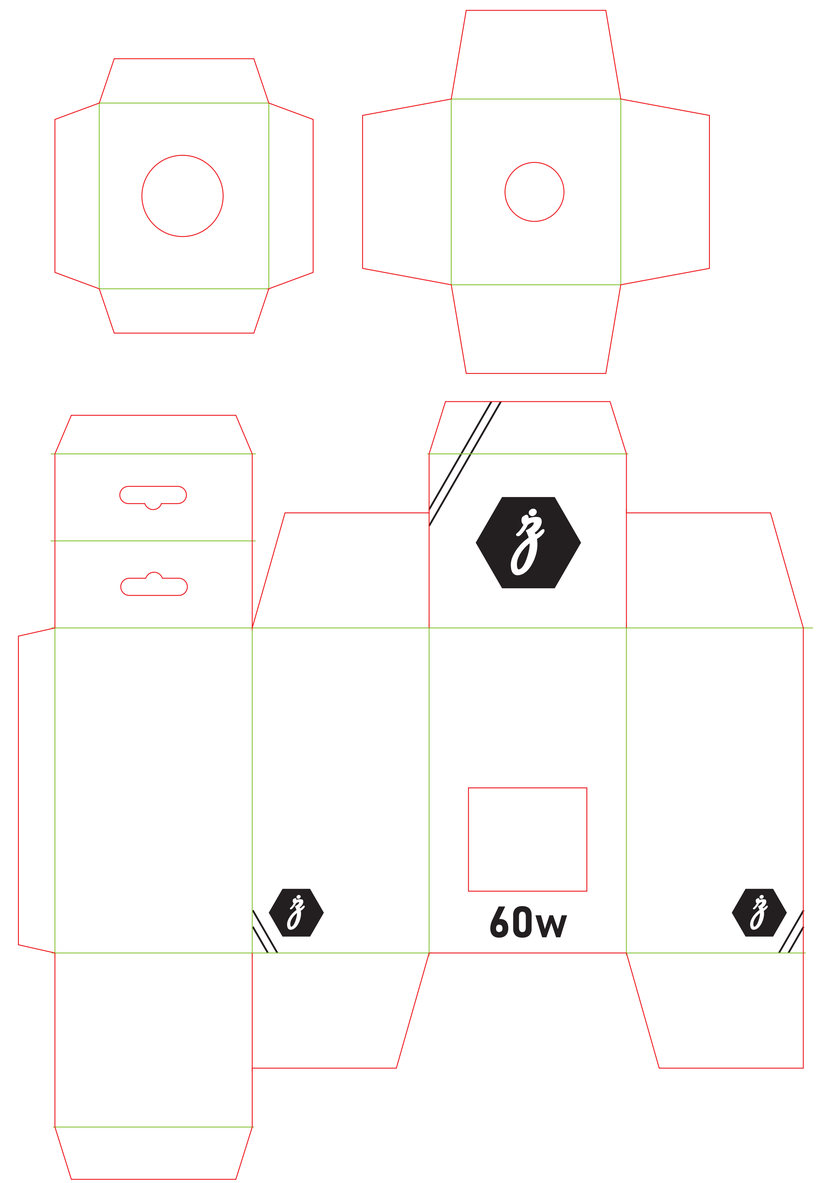
60w

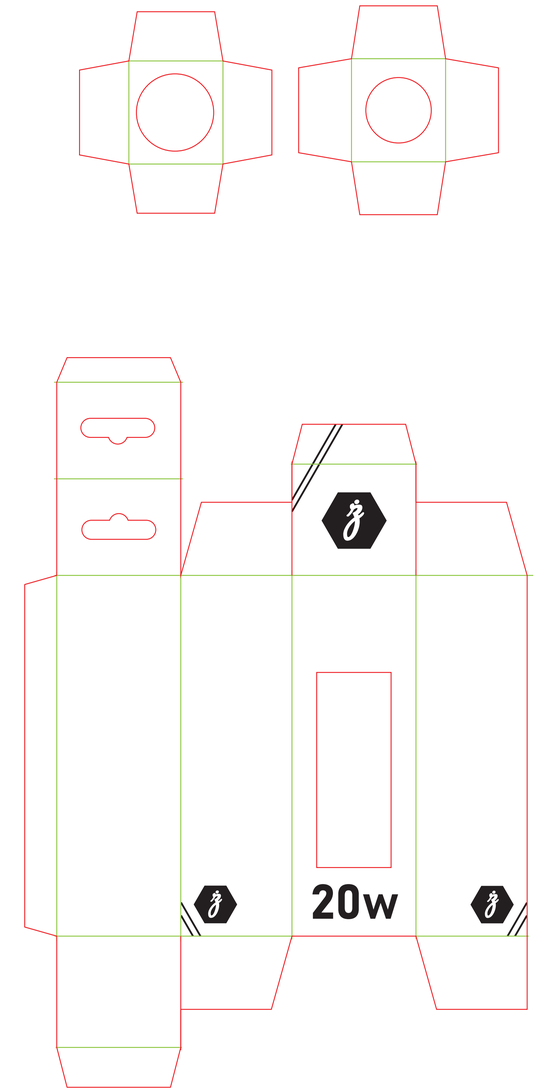
20w